BID B-1674 Addendum 1

Cobalt Truck Equipment

Idaho Truck Specialties LLC DBA as Cobalt truck Equipment

Supplier Response

Event Information

Number: BID B-1674 Addendum 1
Title: Graffiti Trucks
Type: Invitation for Bid
Issue Date: 7/14/2022
Deadline: 8/4/2022 01:00 PM (PT)
Notes:

The City seeks to purchase four vehicles for graffiti removal that will be suitable for rugged, continual use. The vehicles and equipment shall be new, unused, and comply with all minimum specifications contained herein. The vehicles and equipment shall comply with all federal laws, including the US Department of Transportation; State of Nevada laws, including the State of Nevada Occupational Safety and Health Act, the Emission Control Standards for Nevada, and all safety standards in effect at time of delivery to the City of North Las Vegas.

Contact Information

Contact: Joy Yoshida
Address: 2250 Las Vegas Blvd. Suite 820
North Las Vegas, NV 89030
Phone: 1 (702) 6331745
Email: yoshidaj@cityofnorthlasvegas.com

Cobalt Truck Equipment Information

Contact: Carl Petrini
Address: 1607 Industrial Rd
Las Vegas, NV 89102
Phone: (702) 385-4475
Fax: (702) 385-9936
Email: cpetrini@cobalttruck.com
Web Address: www.cobalttruck.com

By submitting your response, you certify that you are authorized to represent and bind your company.

Onecimo Coronel
Signature

ocoronel@cobalttruck.com
Email

Submitted at 8/4/2022 12:37:02 PM (PT)

Supplier Note

Thank you for the opportunity to Bid.

Requested Attachments

Required Documents Complete Bid Packet FINAL- Bid B-1674 Graffiti Trucks.pdf

Exhibits A, B, C, D, and E, must be submitted as part of your Bid response.

Required Documents Complete Bid Packet FINAL- Bid B-1674 Graffiti Trucks.pdf

Exhibit F must be submitted as part of your Bid response. Any and all exceptions to CNLV purchase agreement must be noted in response. All redlines to Exhibit F must be submitted as part of your Bid response. No redlines will be accepted after bid submission.

Required Documents Complete Bid Packet FINAL- Bid B-1674 Graffiti Trucks.pdf

Exhibit G – Technical Specifications Variance Sheet. This must be uploaded with your bid. This document can be found under the “Attachments” tab

Bid Attributes

1	**Acknowledgment of Addendum #1** I acknowledge receipt of Addendum #1 ☑ Acknowledgment of Receipt of Addendum #1 (Acknowledgment of Receipt of Addendum #1)

Bid Lines

1	Graffiti Truck					
	Quantity: 4	UOM: EA	Unit Price:	$136,757.00	Total:	$547,028.00

2	Delivery Charge (If Applicable)					
	If there is no delivery charge applicable, please enter "0"					
	Quantity: 1	UOM: EA	Unit Price:	$0.00	Total:	$0.00

Response Total: $547,028.00

CITY OF NORTH LAS VEGAS
INVITATION TO BID
BID B-1674 Graffiti Trucks
EXHIBIT LISTING

Exhibit A - Offer Statement and Business Information consisting of the following:

(a) An individual authorized to bind the Company should sign the statement, and the date signed should follow the signature.

(b) Provide the name and phone number of the representative authorized to negotiate on behalf of the Respondent and answer questions regarding the Bid.

(c) Provide copies of all Respondent's held state and local licenses applicable to performance of the subject potential Contract. Any Respondent conducting business must have a City of North Las Vegas Business License upon award of the contract. Information concerning City Business License requirements and fees may be obtained by calling the Business Services Division at 702-633-1520. However, a business license is not required to provide a Bid to the City.

(d) Acknowledgement of any Bid addenda.

Exhibit B – Qualifications and Experience of Respondent.

Exhibit C –Affidavit of Rejection of Coverage for Workers' Compensation under NRS 616B.627 and NRS 617.210 (if applicable, this form must also be notarized).

Exhibit D – Non-Collusion Affidavit. **This form must be notarized**

Exhibit E – Written Certification Required by NRS 332.065(3) for contracts with an estimated annual amount required for performance that is in excess of $100,000.00.

Exhibit F – Template of City of North Las Vegas Purchase Agreement. Any and all exceptions to the terms this agreement with explanation must be turned in with electronic submission.

Exhibit G – Technical Specifications Variance Sheet. This must be uploaded with your bid. This document can be found under the "Attachments" tab.

CITY OF NORTH LAS VEGAS
INVITATION TO BID
BID B-1674 Graffiti Trucks
EXHIBIT A
OFFER STATEMENT AND BUSINESS INFORMATION

This Bid is submitted in response to **Bid B-1667 Utility Crew Truck with Crane** and constitutes an offer by this company to enter into a contract as described herein.

Onecimo Coronel — Onecimo Coronel-Cobalt Truck Equipment
AUTHORIZED SIGNATURE NAME (TYPE OR PRINT) — LEGAL NAME OF RESPONDENT

AUTHORIZED SIGNATURE — 08/04/2022
DATE

Territory Manager — 702-370-1553 — N/A- Please email
TITLE — TELEPHONE NUMBER — FAX NUMBER

1607 Industrial Rd.
ADDRESS OF RESPONDENT

Las Vegas — Nevada — 89102
CITY — STATE — ZIP CODE

E-MAIL ADDRESS: ocoronel@cobalttruck.com

CNLV-BUSINESS LICENSE NO: TRCK-000984-2020

X A COPY OF MY CNLV BUSINESS LICENSE IS ATTACHED (if applicable)

FOR INFORMATIONAL PURPOSES ONLY
Is this Respondent a Minority, Women or Disabled Veteran Business Enterprise?
X No ___ Yes If YES specify ___MBE ___WBE ___DVBE

Has this Respondent been certified as a Minority, Women or Disabled Veteran Business Enterprise?
X No ___ Yes If YES specify Certifying Agency _____
Please attach a copy of your certification.

BUSINESS LICENSE

City of North Las Vegas
2250 Las Vegas Blvd. North, Suite 110
North Las Vegas, NV 89030

Mailing Address:

COBALT TRUCK EQUIPMENT
345 W KARCHER RD
NAMPA, ID 83687

In conformity with and subject to the provisions of the Ordinances of the City of North Las Vegas and the laws of the State of Nevada, license is hereby granted to operate the business described hereon:

License Number: **TRCK-000984-2020** Expiration Date: **08/31/2022**

License Type: **TRUCKING**

Classification: **TRUCKING**

Business Location: **COBALT TRUCK EQUIPMENT**
1607 INDUSTRIAL RD
LAS VEGAS, NV 89102

Owner/Principal(s): **IDAHO TRUCK SPECIALTIES LLC**

CITY OF
NORTH LAS VEGAS

Your Community of Choice

Marc Jordan
Director of Land Development &
Community Services

This license is not transferable
POST IN A CONSPICUOUS PLACE

Mayor
John J. Lee

Council Members
Scott Black
Pamela A. Goynes-Brown
Isaac E. Barron
Richard J. Cherchio

City Manager
Ryann Juden

Finance Department
Purchasing Department
2250 Las Vegas Boulevard, North · Suite #710 · North Las Vegas, Nevada 89030 Telephone: (702) 633-1745 · Fax: (702) 669-3328 · TDD: (800) 326-6868
www.cityofnorthlasvegas.com

July 28, 2022

CITY OF NORTH LAS VEGAS
INVITATION TO BID
BID B-1674 Graffiti Trucks
Addendum #1

The deadline for questions for this proposal was 12:00 p.m., Thursday, June 28, 2022.

No Questions submitted.

Joy Yoshida

Joy Yoshida
Buyer
Purchasing Department

City of North Las Vegas
BID B-1674 Graffiti Trucks
Pre-bid Meeting held on July 21, 2022 at 10:00 a.m. via Google Meet conference call
Conference Call Attendees

City of North Las Vegas
Joy Yoshida, Buyer, Purchasing
Kenneth Malley, Assistant Manager Fleet Operations
Joshua Christensen, Lead Code Enforcement Officer
Khayla Lopez-Ruiz, Office Assistant

Vendors
Onecimo Coronel, Territory Manager
Cobalt Truck
1607 Industrial Road Las Vegas, NV 89102
Email: ocoronel@cobalttruck.com

CITY OF NORTH LAS VEGAS
INVITATION TO BID
BID B-1674 Graffiti Trucks
EXHIBIT B
QUALIFICATIONS AND EXPERIENCE OF RESPONDENT

Name: Onecimo Coronel, Territory Manager, Cobalt Truck Equipment

1. Respondent shall provide a brief description of the Responder's qualifications and experience, and number of years in operation.

Cobalt Truck Equipment has been building and servicing work trucks and truck equipment in the Las Vegas Valley for 13 plus years. Cobalt's Las Vegas shop qualifies in all areas of requirements when it comes to work trucks due to their extensive experience with many builds and repairs for local customers.

In 2020 and most recently 2022 The City of North Las Vegas has awarded many builds to Cobalt Truck Equipment that have been and will be delivered with the highest quality and craftsmanship.

Provide 3 examples of contracts similar in size and scope that have been completed in the past 5 years. The City reserves the right to verify references for the companies identified. Ensure references have given permission to be contacted by the City.

Example Contract 1:

Company Name: Clark County Water Reclamation

Company Address: 5857 E. Flamingo Rd.
Las Vegas, NV 89122

Point of Contact: Douglas Moore Phone Number: 702-668-8090

E-Mail Address: dmoore@cleanwaterteam.com

Brief Description of Contract Scope: 2019 Ford F550 Knapheide Service Body with Compressor, Inverter, toolboxes, reels and lighting.

Term of Contract (Base plus Option Years): 5

Year of Base Contract Award: 2019 Year Contract Completed: Active

Base Contract Amount: $ 141,720.00 Total Contract Amount (including all option years) $ 283,440.00

Did the contract contain a liquidated damages clause? ☐ YES ☒ NO

If yes, were damages assessed? ☐ YES ☐ NO If yes, what was the amount assessed? $ _____

CITY OF NORTH LAS VEGAS
INVITATION TO BID
BID B-1674 Graffiti Trucks
EXHIBIT B – QUALIFICATIONS AND EXPERIENCE OF RESPONDENT (Continued)

Example Contract 2:
Company Name: NV Energy

Company Address: 6226 W. Sahara Ave. Las Vegas, NV 89151

Point of Contact:: Randy Koss Phone Number: 702-402-6955

E-Mail Address: randy.koss@nvenergy.com

Brief Description of Contract Scope: 2020 Ford Utility Platform Truck with Knapheide platform body, toolboxes, generator, drawer units and lighting.

Term of Contract (Base plus Option Years): 1 year

Year of Base Contract Award: 2020 Year Contract Completed: 2021

Base Contract Amount: $ 123,860.00 Total Contract Amount (including all option years) $ 495,440.00

Did the contract contain a liquidated damages clause? ☐ YES ☒ NO

If yes, were damages assessed? ☐ YES ☐ NO If yes, what was the amount assessed? $

Example Contract 3:
Company Name: City of North Las Vegas

Company Address: 100 E. Brooks Ave. North Las Vegas, NV 89030

Point of Contact: Joy Yoshida Phone Number: 702-633-1745

E-Mail Address: yoshidaj@cityofnorthlasvegas.com

Brief Description of Contract Scope: 2023 International MV607 Chassis with a Stellar TMax-2 11 ft crane body build upfit

Term of Contract (Base plus Option Years): 1 Year

Year of Base Contract Award: 2022 Year Contract Completed: Active

Base Contract Amount: $ 525,760.00 Total Contract Amount (including all option years) $ 525,760.00

Did the contract contain a liquidated damages clause? ☐ YES ☒ NO

If yes, were damages assessed? ☐ YES ☐ NO If yes, what was the amount assessed? $ _____

(ATTACH ADDITIONAL SHEET(S) IF EXTRA SPACE IS NEEDED)

CITY OF NORTH LAS VEGAS

Your Community of Choice

CITY OF NORTH LAS VEGAS
INVITATION TO BID
BID B-1674 Graffiti Trucks

EXHIBIT D- Non-Collusion Affidavit

State of Nevada County of Clark

Onecimo Coronel being first duly sworn deposes that:

(1) He/She is the Territory Manager of Cobalt Truck Equipment, the Respondent that has submitted the attached Bid.

(2) He/She is fully informed respecting the preparation and contents of the attached Bid and of all pertinent circumstances respecting such Bid;

(3) Such Bid is genuine and is not a collusive or sham Bid;

(4) Neither the said Respondent nor any of its officers, partners, owners, agents, representatives, employees or parties in interest, including this affiant, has in any way colluded, conspired, connived or agreed, directly or indirectly, with any other Respondent, firm, or person to submit a collusive or sham Bid in connection with the contract or agreement for which the attached Bid has been submitted or to refrain from making a Bid in connection with such contract or agreement, or collusion or communication or conference with any other Respondent, or, to fix any overhead, profit, or cost element of the Bid price or the Bid price of any other Respondent, or to secure through collusion, conspiracy, connivance, or unlawful agreement any advantage against the City of North Las Vegas or any person interested in the proposed contract or agreement; and

(5) The Bid of service outlined in the Bid is fair and proper and is not tainted by collusion, conspiracy, connivance, or unlawful agreement on the part of the Respondent/team or any of its agents, representatives, owners, employees, or parties including this affiant.

(Signed): [signature]

Title: Territory Manager

Subscribed and sworn to before me this August day of fourth ~~20~~. 2022

Brandi Anastasia Kopydlowski
Notary Public

My Commission expires: October 18, 2024

BRANDI ANASTASIA KOPYDLOWSKI
Notary Public, State of Nevada
Appointment No. 20-6445-01
My Appt. Expires Oct 18, 2024

#SDCEGL8J0D5LJUv1

CITY OF NORTH LAS VEGAS
INVITATION TO BID
BID B-1674 Graffiti Trucks

EXHIBIT C – AFFIDAVIT OF REJECTION OF COVERAGE FOR WORKERS' COMPENSATION UNDER NRS 616B.627 AND NRS 617.210

In the State of Nevada, County of Clark, _____, being duly sworn, deposes and says:

1. I make the following assertions pursuant to NRS 616B.627 and NRS 617.210.

2. I am a sole proprietor who will not use the services of any employees in the performance of this Contract with the City of North Las Vegas.

3. In accordance with the provisions of NRS 616B.659, I have not elected to be included within the terms, conditions and provisions of chapters 616A to 616D, inclusive, of NRS, relating thereto.

4. I am otherwise in compliance with the terms, conditions and provisions of chapters 616A to 616D, inclusive, of NRS.

5. In accordance with the provisions of NRS 617.225, I have not elected to be included within the terms, conditions and provisions of chapter 617 of NRS.

6. I am otherwise in compliance with the terms, conditions and provisions of chapter 617 of NRS.

7. I acknowledge that the City of North Las Vegas will not be considered to be my employer or the employer of my employees, if any; and that the City of North Las Vegas is not liable as a principal contractor to me or my employees, if any, for any compensation or other damages as a result of an industrial injury or occupational disease incurred in the performance of this Contract.

I, _____, do here swear under penalty of perjury that the assertions of this affidavit are true.

Signed this _____ day of _____, 20_____.

Signature_____

State of _____

County of _____
Signed and sworn to (or affirmed) before me on this _____ day of _____, 20_____,

by_____ (name of person making statement).

Notary Signature_____

STAMP AND SEAL

CITY OF NORTH LAS VEGAS
INVITATION TO BID
BID B-1674 Graffiti Trucks

EXHIBIT E- Written Certification

Pursuant to NRS 332.065(3), a governing body or its authorized representative shall not enter into a contract with an estimated value in excess of $100,000 with a company unless the contract includes a written certification that the company is not currently engaged in, and agrees for the duration of the contract not to engage in, a boycott of Israel.

By signing below, the Respondent agrees and certifies that they do not currently boycott Israel and will not boycott Israel during any time in which they are entering into, or while in contract, with the City. If at any time after the signing of this certification, the Respondent decides to engage in a boycott of Israel, the Respondent must notify the City in writing.

Onecimo Coronel	Onecimo Coronel
AUTHORIZED SIGNATURE NAME (TYPE OR PRINT)	LEGAL NAME OF RESPONDENT
Onecimo Coronel	8/4/22
AUTHORIZED SIGNATURE	DATE

Territory Manager
TITLE

CITY OF NORTH LAS VEGAS
INVITATION TO BID
BID B-1674 Graffiti Trucks

EXHIBIT F- Exceptions to North Las Vegas Purchase Agreement

Please provide an explanation to any and all exceptions on terms of the North Las Vegas Purchase Agreement.

No Exception on Terms.

AGREEMENT TO PURCHASE GRAFFITI-ABETEMENT TRUCKS

This Agreement to Purchase Graffiti-Abetement Trucks ("Agreement") is made and entered into as of _____ ("Effective Date") by and between the City of North Las Vegas, a Nevada municipal corporation ("City") and [name of entity], a [state of registration and type of entity] ("Provider").

RECITALS

WHEREAS, the City desires to purchase four (4) graffiti trucks as detailed on Invitation to Bid B-1674 ("Invitation to Bid"), attached hereto as Exhibit A ("Products").

WHEREAS, the City desires to purchase the Products from Provider as outlined in this Agreement, including Exhibit A and Exhibit B, and Provider agrees to sell and deliver the Products upon the terms and conditions described in this Agreement.

NOW, THEREFORE, upon good and valuable consideration, the receipt and sufficiency of which is hereby acknowledged, the City and the Provider agree to the following terms, conditions, and covenants:

SECTION ONE
RESPONSIBILITY OF PROVIDER

1.1. The Provider shall perform all of its obligations in the manner set forth in this Agreement including, without limitation, selling the Products to the City at the prices and quantities set forth in the Provider's bid dated [_____] ("Bid") attached hereto as Exhibit B, complying with the terms of the Invitation to Bid, attached hereto as Exhibit A, and all related additional or incidental tasks necessary to effectuate the intent of this Agreement.

1.2. The Products shall be new and must meet or exceed the technical specifications detailed in the Bid or as otherwise specified by the City.

1.3. The Provider shall ship the Products to a shipping address specified by the City ("Delivery Location") F.O.B. Delivery Location as ordered by the City. Provider bears all risk of loss or damage to the Products until delivery of the Products to the City. Title to the Products passes to the City only after delivery and unloading of the Products at the Delivery Location is complete. Delivery of the Products is not complete until such Products have physically been received and accepted by the City.

1.4. The Provider shall furnish all user, instruction, or operator manuals for the Products as applicable.

1.5. The Provider shall furnish copies of all standard product warranties, extended warranties, and service and maintenance agreements for the Products from any manufacturer. To the extent possible, the Provider shall transfer or assign such warranties and agreements upon the request of the City.

1.6. The Provider shall promptly notify the City any time that the Provider fails to meet the requirements of this Agreement and shall, at its own expense, promptly take all actions to come back into compliance with this Agreement. If the Provider performs any additional task without obtaining the City's prior written approval, the Provider does so at its own risk and expense.

1.7. The Provider shall at its own expense comply at all times with all municipal, county, state and federal laws, regulations, rules, codes, ordinances, and other applicable legal requirements.

SECTION TWO
PAYMENT AND TERM

2.1. The term of this Agreement shall commence on the Effective Date and continue until the Products have been delivered and accepted by the City, unless earlier termination with accordance with the terms herein. Depending on the Products quantity that the City orders from the Provider the City may pay the Provider for the Products up to an amount not to exceed [_____ ($_____)] annually.

2.2. The prices in the Bid will remain in effect for the first three (3) years of the Agreement. No additional compensation shall be paid, and no increase in the time of performance shall be awarded to the Provider without the prior written authorization of the City to proceed with such changes.

2.3. Payment to the Provider shall be made within thirty (30) calendar days after the City receives each invoice from the Provider, provided that such invoice is complete, correct, and undisputed by the City. Upon reconciliation of all errors, corrections, credits, and disputes, payment to the Provider will be paid in full within 30 calendar days. Invoices received without a valid purchase order number will be returned unpaid. The Provider shall submit the original invoice to:

City of North Las Vegas Finance Department
Attention: Accounts Payable
2250 Las Vegas Blvd., North, Suite 700
North Las Vegas, NV 89030

SECTION THREE
REPRESENTATIONS AND WARRANTIES

3.1. Provider represents and warrants for the benefit of City, in addition to any other representations and warranties made in this Agreement, with the knowledge and expectation of City's reliance thereon, as follows:

3.1.1. Provider is a duly formed and validly existing [entity type] and is in good standing pursuant to the laws of the State of Nevada and has the full power, authority and legal right to execute, deliver and perform under this Agreement.

3.1.2. The Products are now and shall be at the time of delivery free from any security interest, lien, or other encumbrance.

3.1.3. Provider is financially solvent, able to pay its debts as they mature, and possessed of sufficient working capital to perform all of its obligations under this Agreement.

3.2. The representations and warranties made by Provider survive the termination or expiration of the Agreement.

SECTION FOUR
INSURANCE

Provider shall obtain and maintain, at its expense, the following insurance coverage for all work related to the performance of this Purchase Agreement: commercial general liability insurance, automobile liability insurance, worker's compensation insurance, and employers' liability insurance. While a copy of the Provider's insurance certificate is not immediately required, the City reserves the right to request a copy of the Provider's insurance certificate at any time during the Term of the Agreement. It is the Provider's responsibility to produce the insurance certificate upon the City's request.

SECTION FIVE
TERMINATION

The City may terminate this Agreement at any time with or without cause upon notice to the Provider, and the City shall have no liability to the Provider for such termination except that the City shall pay the Provider for the reasonable value of the Products provided by the Provider to City up through and including the date of termination, provided that the Provider, within thirty (30) days following the date of the City's termination notice, submits an invoice for such Products in a form reasonably acceptable to the City and such invoice is supplemented by such underlying source documentation as is reasonably requested by the City.

SECTION SIX
INDEMNIFICATION

Notwithstanding any of the insurance requirements or limits of liability set forth herein, the Provider shall defend, protect, indemnify, and hold harmless the City, and its officers, agents, and employees, from any liabilities, claims, damages, losses, expenses, proceedings, suits, actions, decrees, judgments, reasonable attorneys' fees, and court costs which the City suffers, and/or its officers, agents or employees suffer, as a result of, or arising out of, the negligent or intentional acts or omissions of the Provider, its agents, and employees, or anyone employed by any of them, in fulfillment or performance of the terms, conditions or covenants of this Agreement including, without limitation, compliance with the terms of Exhibit A, and Exhibit B. This Section shall survive the termination or expiration of this Agreement until such time as the applicable statutes of limitation expire.

SECTION SEVEN
NOTICES

7.1. All notices, demands, and other instruments required or permitted to be given pursuant to this Agreement shall be in writing and be deemed effective upon delivery in writing if served by personal delivery, by overnight courier service, by facsimile, or by overnight express mail, or upon posting if sent by registered or certified mail, postage prepaid, return receipt requested, and addressed as follows:

To City: City of North Las Vegas
Attention: Joy Yoshida
2250 Las Vegas Blvd., North, Suite 820
North Las Vegas, NV 89030
Phone: 702-633- 1745

To Provider: [_____]
Attention: [_____]
[_____]
[_____]
Phone: [ ]

7.2. The address to which any notice, demand, or other writing may be delivered to any party as above provided may be changed by written notice given by such party as above provided.

SECTION EIGHT
SAFETY

8.1. Obligation to Comply with Applicable Safety Rules and Standards. Contractor shall ensure that it is familiar with all applicable safety and health standards promulgated by state and federal governmental authorities including, but not limited to, all applicable requirements of the Occupational Safety and Health Act of 1970, including all applicable standards published in 29 C.F.R. parts 1910, and 1926 and applicable occupational safety and health standards promulgated under the state of Nevada. Contractor further recognizes that, while Contractor is performing any work on behalf the City, under the terms of this Agreement, Contractor agrees that it has the sole and exclusive responsibility to assure that its employees and the employees of its subcontractors comply at all times with all applicable safety and health standards as above-described and all applicable City safety and health rules.

8.2. Safety Equipment. Contractor will supply all of its employees and subcontractors with the appropriate Safety equipment required for performing functions at the City facilities.

SECTION NINE
MISCELLANEOUS

9.1. Nevada and City Law. The laws of the State of Nevada and the North Las Vegas Municipal Code shall govern the validity, construction, performance, and effect of this Agreement, without regard to conflicts of law. The parties to this Agreement consent to the jurisdiction of any court of competent jurisdiction in Clark County, Nevada to adjudicate any dispute related top this Agreement or actions to enforce or interpret the terms of this Agreement.

9.2. Assignment. Any attempt to assign this Agreement by the Provider without the prior written consent of the City shall be void.

9.3. Non-Waiver. The failure to enforce or the delay in enforcement of any provision of this Agreement by a party shall in no way be construed to be a waiver of such provision or right unless such party expressly waives such provision or right in writing.

9.4. Partial Invalidity. If any term of this Agreement should be held by a court of competent jurisdiction to be invalid, void or unenforceable, all provisions not held invalid, void or unenforceable, shall continue in full force and effect.

9.5. Controlling Agreement. To the extent any of the terms or provisions in the Bid conflict with this Agreement, the terms and provisions of this Agreement shall govern and control. Any additional, different or conflicting terms or provisions contained in Provider's Bid or any other written or oral communication from Provider shall not be binding in any way on the City whether or not such terms would materially alter this Agreement, and the City hereby objects thereto.

9.6. Attorneys' Fees. In the event any action is commenced by either party against the other in connection with this Agreement, the prevailing party shall be entitled to its costs and expenses, including reasonable attorneys' fees, as determined by the court, including without limitation, fees for the services of the City Attorney's Office. This Section 9.6 shall survive the completion of this Agreement until the applicable statutes of limitation expire.

9.7. Entire Agreement. This Agreement constitutes the entire agreement between the parties and supersedes all prior representations, agreements, and understandings of the parties. No addition to or modification of this Agreement shall be binding unless executed in writing by the parties hereto.

9.8. Time of Essence. Time is of the essence in the performance of this Agreement.

9.9. Shipping. The Products are to be packaged in a manner that assures they are protected against deterioration and contamination. All shipments are to meet applicable D.O.T. Regulations. Serial numbers noted on the packing slip must match the serial number of the actual goods shipped. Incorrect or questionable documentation of serial numbers may result in shipment rejection. Shipments rejected due to Provider error will be returned solely at Provider's cost.

9.10. Inspection. An authorized representative of the City will inspect the Products at time of delivery. If deficiencies are detected, the Products may be rejected and the Provider will be required to make necessary repairs, corrections, or replacements. Payment and/or commencement of a discount period will not be made until the corrective action is made, the Products are re-inspected, and accepted.

9.11. Further Assurances. The Provider shall execute and deliver all such documents and perform such acts as are reasonably requested by the City to complete its obligations under this Agreement.

9.12. Effect of Agreement Termination. In the event this Agreement is terminated, all rights and obligations of the parties hereunder shall cease, other than indemnity obligations, and matters that by their terms survive the termination hereof.

9.13. Fiscal Funding Out. The City reasonably believes that sufficient funds can be obtained to make all payments during the term of this Agreement. Pursuant to NRS Chapter 354, if the City does not allocate funds to continue the function performed by the Provider under this Agreement, this Agreement will be terminated when appropriated funds expire.

9.14. Public Record. Pursuant to NRS 239.010 and other applicable legal authority, each and every document provided to the City may be a "Public Record" open to inspection and copying by any person, except for those documents otherwise declared by law to be confidential. The City shall not be liable in any way to the Provider for the disclosure of any public record, including but not limited to documents provided to the City by the Provider. In the event the City is required to defend an action with regard to a public records request for documents submitted by the Provider, the Provider agrees to indemnify, hold harmless, and defend the City from all damages, costs, and expenses, including court costs and reasonable attorney's fees related to such public records request. This section 8.14 shall survive the expiration or early termination of the Agreement.

9.15. Electronic Signatures. For purposes of this Agreement, the use of facsimile, email or other electronic medium shall have the same force and effect as original signatures.

9.16. Federal Funding. Supplier certifies that neither it nor its principals are presently debarred, suspended, proposed for debarment, declared ineligible, in receipt of a notice of proposed debarment or voluntarily excluded from participation in this transaction by any federal department or agency. This certification is made pursuant to the regulations implementing Executive Order 12549, Debarment and Suspension, 28 C.F.R. pt. 67, § 67.510, as published as pt. VII of the May 26, 1988, Federal Register (pp. 19160-19211), and any relevant program specific regulations. This provision shall be required of every subcontractor receiving any payment in whole or in part from federal funds.

9.17. Boycott of Israel. Pursuant to NRS 332.065(4), Provider certifies that the Provider is not currently engaged in a boycott of Israel, and Provider agrees not to engage in a boycott of Israel during the Term.

IN WITNESS WHEREOF, the City and the Provider have caused this Agreement to be executed as of the day and year first above written.

City of North Las Vegas, a Nevada municipal corporation	[_____], a [_____]
By: _____ John J. Lee, Mayor	By: _____ Title: _____ Name: _____

Attest:

By: _____
Jackie Rodgers, City Clerk

Approved as to Form:

By: _____
Micaela Rustia Moore, City Attorney

Exhibit A

Invitation to Bid – BID B-1674

Please see attached page(s).

Exhibit B

Bid

Please see attached page(s).

CITY OF NORTH LAS VEGAS
INVITATION TO BID
BID B-1674 Graffiti Trucks
EXHIBIT G- Technical Specifications Variance Sheet

This must be uploaded with your bid.
This document can be found on NGEM under the “Attachments” tab.

CITY OF NORTH LAS VEGAS
INVITATION TO BID
BID B-1674 Graffiti Trucks

EXHIBIT G
Technical Specifications Variance Sheet

BIDDERS MUST RETURN THIS FORM AND MAKE AN ENTRY FOR EACH NUMBERED SPECIFICATION IN THE SPACE PROVIDED OPPOSITE THE SPECIFICATION INDICATING CONFORMANCE TO SPECIFICATION. THE CITY OF NORTH LAS VEGAS RESERVES THE RIGHT TO REJECT ANY BID PROPOSAL THAT DOES NOT CONFORM WITH THE ABOVE REQUIREMENT. IF THERE IS NOT ENOUGH SPACE, ATTACH A SEPARATE PIECE OF PAPER.

GENERAL SPECIFICATION NO. 1	VARIANCE
Class 3 Conventional Extended Cab GVWR 14,000 lbs Front axle: 4,550 lb GAWR Rear axle: 10,040 lb GAWR 4 x 2	✓
ENGINE & EQUIPMENT SPECIFICATION NO. 2	**VARIANCE**
7.3L V8 Gas Power Equipment Group Alternator 150 amp minimum 50-State Emissions System	✓
TRANSMISSION & EQUIPMENT SPECIFICATION NO. 3	**VARIANCE**
TorqShift 10-Speed Automatic Transmission Must be capable of 75 MPH highway speeds @ approximately 1800 RPM Transmission shall be auto neutral when PTO is engaged. Transmission shall be designed to operate split-shaft PTO units	✓
FRONT AXLE & SUSPENSION SPECIFICATION NO. 4	**VARIANCE**
Front Twin I-Beam independent suspension with anti- roll bar, HD shocks 17 x 6.5 argent steel wheels 4,550 lbs rating Firm ride Suspension	✓
REAR AXLE & SUSPENSION SPECIFICATION NO. 5	**VARIANCE**
23,500 lbs rear axle capacity Axle ratio: Limited Slip w/4.30 Axle Ratio capable of 75 mph highway speeds @ approximately 1800 engine RPM Rear rigid axle leaf suspension w/ anti-roll bar Heavy-duty shock absorbers	✓
Intentionally left blank	Intentionally left blank

BRAKE SYSTEM SPECIFICATION NO. 6	VARIANCE
4-wheel ABS brakes Front and Rear Disc Brakes Brake assist Driveline traction control	✓
FRAME & WHEELBASE SPECIFICATION NO. 7	**VARIANCE**
50,000 psi yield steel frame Wheelbase: 168” approximate Cab to axle 60” approximate	✓
CHASSIS EQUIPMENT SPECIFICATION NO. 8	**VARIANCE**
Bumper front full width steel- painted manufacturer’s standard color Two front tow hooks, one per side Truck must have a clean frame from the back of the cab	✓
FUEL TANKS & EQUIPMENT SPECIFICATION NO. 9	**VARIANCE**
Minimum 40 gallon fuel tank	✓
TIRES & WHEELS SPECIFICATION NO. 10	**VARIANCE**
Front and rear 17 x 6.5 argent steel wheels; LT245/75SR17 EBSW AS front and rear tires full size spare wheel and tire	✓
CAB EXTERIOR & INTERIOR SPECIFICATION NO.11	**VARIANCE**
Black cloth 40/20/40 Split Bench Seat Power Front & Rear Seat Windows. Rear bench seat, vinyl Horn Dual power remote heated mirrors Tinted glass all around. Windshield- clear laminated glass. Windshield wipers- two speed electric with windshield washer. Factory installed dash instrument gauge package Factory installed air conditioning and heating. Radio grade AM/FM stereo with seek-scan, single in-dash CD player, MP3 decoder, auxiliary audio input, external memory control Dome light. Power locks and power windows. Ecco P/N EC7004SK (No Sub) Back-up camera with (4) integrated ultrasonic proximity sensors and audible warning in cab Dual sun visors. SYNC Communication & Entertainment System (1) Factory installed lighted PTO control switch	✓

Rubber floor mats. (5) Factory installed upfitter switches. Electronic backup alarm. Preprinted UV laminate labels to be applied to switches to	✓
LIGHTING & ELECTRICAL SPECIFICATION NO.12	VARIANCE
DOT APPROVED: Light Emitting Diode (LED) Basic wiring schematic 12v negative ground system. Automatic self-reset circuit breakers. Halogen headlights. Solid state HD flasher. Self-canceling turn signals Multi-strobe system supplied and installed (2) Federal Signal Micropulse Ultra strobe lights, (1) each side of body above fender wells (2) Federal Signal corner strobe lights, (1) in each headlamp (2) Federal Signal Quadraflare LED lights, mounted on rear of body Federal Signal Legend light bar mounted to cab Federal Signal Latitude (SL8S-A48) 48” directional light bar Recessed in rear bumper Light to be mounted with all wiring enclosed inside body Flush mount LED tail, clearance, directional and backup lights, trailer connection to be a 7 way flat RV style. All components, lights and accessories shall be mounted/ installed per manufacturer recommendations. All wiring shall be loomed hidden and protected at chafing points. Scotch lock type connectors are not permitted. All aftermarket installed equipment such as utility body, crane, compressor and lighting shall utilize truck manufacturer- installed programmable power modules and switches. Switches shall be factory dash mounted in plain view of the operator. Chassis shall be factory pre wired/ equipped for all aftermarket up-fitter installed equipment. Provisions to include power sources, remote start, stop idle control and auto neutral. All wiring shall be loomed, hidden and protected at chafing points. Scotch lock type connectors are not permitted.	✓
PAINT SPECIFICATION NO.13	VARIANCE
One color, Oxford white. Exterior: Fleet White Urethane with total finish thickness of minimum 4 mils, then baked dry. All aftermarket body and mounting components shall be undercoated with rubberized polyurethane undercoating. The body assembly shall be washed with a hot alkaline cleaner, phosphate coated and rinsed with seal coat to prevent flash rust. The body shall be baked dry, undercoated with rubberized polyurethane undercoating thoroughly sanded and prime painted. The unit to be top coated with industrial quality urethane paint to a total finish thickness of minimum 4 mils, then baked dry. Speedliner the front of the body white. Speedliner the cargo area floor and	✓

walls black. Speedliner tailgate interior, over the top and down the rear ¼”. Front steel wheels. Rear steel wheels. Spare tire; steel wheel.	
MANUALS/KEYS SPECIFICATION NO.14	VARIANCE
Two sets of service, repair and diagnostic manuals to be provided for vehicle and all mounted equipment. Manuals to be delivered with vehicle. CD’s or free online access to service and diagnostic manuals is an acceptable substitute for paper manuals. PC-based diagnostic software to troubleshoot diagnose and repair engine, transmission, cab, chassis and all vehicle subsystems including, but not limited to HVAC systems, instrument clusters, lighting, ABS brake systems and power distribution modules. All required interface adaptors and cabling must be provided. Six sets of keys for all locks/ ignitions. All compartments keyed alike. Manuals are to be delivered with the vehicle in binders. Binders shall be tabbed and organized by the system. Electrical and hydraulic schematics must be supplied for all auxiliary equipment to include interface to chassis. Handwritten schematics will not be accepted.	✓
STEERING SPECIFICATION NO.15	VARIANCE
Power assist.	✓
SPECIAL EQUIPMENT SPECIFICATION NO. 16	VARIANCE
UTILITY BODY Knapheide model PGNC-96 custom body or equivalent supplied as follows: - 9'6" long X 95.75" wide for 60" CA dual rear wheel chassis - 34" long sill spacing - 12 Ga. treadplate floor - 12 gauge cross sills on 16" centers - 6" structural channel long sills - 2" X 4" side and rear stake pockets on both sides - Integrated class V 2" receiver hitch at rear of platform rated at 12,500 lbs - Safety chain attachment points at rear hitch - 7 way plug factory wired at the receiver hitch - Rear tail skirt includes integrated light boxes, each with B/U and S/T/T light factory wired - Includes all clearance and marker lights and wire harness installed from factory - Bottle gas drop well w/ mesh swing out door installed curbside front of body	✓

- (1) front underbody toolboxes 18"H x 24"W x 18"D, streetside - (2) rear underbody toolboxes 18"H x 24"W x 18"D, (1) each side - (1) adjustable shelf each toolbox - (1) streetside front vertical compartment 28"H x 24"W x 18"D w/ (2) pullout shelves - Rattle can trays for each shelf in LV1 - Bracket for paint edger installed right front of body - 10" drop down sides and rear on platform - 9" Step Bumper - 9.75"H x 30.75"W x 40.88"D Waste basket with hinged fold down door, solid sides, and punched top and front installed curbside - Complete immersion in electrodeposition gray epoxy primer - Painted Ford Oxford white Heavy duty cab guard installed as follows: - 3/4 #9 flattened expanded metal window screen - Integrated 30 gallon hydraulic tank bulkhead - Powder coated white (2) Titan 236-154A Hydraulic Airless Paint Pumps installed as follows: - Mounted above lowered open area front right of body - Precise pressure control - Speeflo HydraDrive - High efficiency cooling fan 100 Gallon Plastic-Mart CRM1-100RT water tank installed as follows: - 48"L x 20"W x 29"H - Steel retainer strips - 8" lid w/ 2" female threaded outlet - 2" NPT Hydrant Fill Coupler - Internal baffle balls Landa PGDC5-35324E Pressure Washer installed as follows: - Mounted SS rear of body - 50' Tuff-Skin Hose - Variable Pressure Wand - 4.7 GPM @ 3500 PSI - Honda Gas Engine w/ 5 gallon fuel tank - Diesel/Kerosene/Fuel Oil 10 gallon heating tank (3) Hannay 3/8" x 150' Enclosed Hose Reel Cabinets installed as follows: - Mounted on rear of body Fully adjustable spring rewind reel Wand storage cabinet installed next to pressure washing system: - Holds (3) wands - Lockable door	✓

(2) CargoGlide CG1000XL Slide-Out Trays installed on platform as follows: - (1) mounted to each side of body facing outwards - 1,000 lbs capacity - Steel frame w/ burnished aluminum faceplate - 100% extension (3) Emberton heavy duty single-drawer units installed as follows: - Fits each underbody toolbox - 12" tall x 14" deep, 22" wide - 12 gauge end panels - 16 gauge drawers - Double pull latches - 250 lb. capacity roller slides - Powder coated black sides and yellow drawers - (1) adjustable divider kit each (1) Emberton heavy duty single-drawer lockable unit installed as follows: - Mounted underneath right rear reel enclosures - 12" tall x 34" deep, 31" wide - 12 gauge end panel - 16 gauge drawer - Double pull latch - 250 lb. capacity roller slides - Powder coated black sides and yellow drawer - (1) adjustable divider kit Maxxima LED strip lighting (No Sub) shall be installed in all compartments on the top and the sides. Lighting to be installed with welded stud bolts and clamps. Two-sided tape will not be accepted. Controlled by upfitter switch	✓
WARRANTY SPECIFICATION NO.17 Body: A 3 years warranty on body to cover 3 years labor and workmanship, 3 years original and replacement parts, , five years body rust-through coverage. Written warranty to be included with bid. Paint/Bedliner: 5 year paint and Speedliner coverage on structural components of body, doors, and panels to be free from defects such as corrosion, blisters, unreasonable color loss, or delamination determined to be the result of paint failure. Written warranty must be included with bid.	VARIANCE ✓
OTHER ITEMS SPECIFICATION NO.18 2D layout drawings provided with bid. 3D CAD drawing of the entire truck package and any specialized items noted on the bid will be required within 2 weeks after receipt of award. A weight slip must be provided from a registered scale agent upon delivery. A loaded computer generated weight distribution analysis will be	VARIANCE ✓

required within 2 weeks after receipt of award. Severe duty spring work package to be included; spring work to be performed after truck has been delivered and loaded with tools and equipment by City of North Las Vegas. After spring work is completed, body package is to set approximately 2” higher in the rear and level side to side. Two hard copies of operator manuals for vehicle and all mounted equipment must be provided at time of delivery. Operator video must be provided if available.	✓
PART & COMPONENTS CONTACT INFORMATION: Boise Metal Works 11345 W. President Avenue Boise, ID 83713 208-376-7777 Emberton’s Machine & Tool, Inc. 1215 Pioneer Way El Cajon, California 92020 619-588-7726 Custom Fluid Power 16083 Franklin Blvd. Suite #1 Nampa, ID 83687 208-461-7153	✓

End of Item # 1 Signature of Bidder: Orin Gould

INDEX

PAGE 1: STREET SIDE EXTERIOR VIEW
PAGE 2: CURB SIDE EXTERIOR VIEW
PAGE 3: FRONT VIEW
PAGE 4: REAR VIEW
PAGE 5: TOP VIEW

CHASSIS: 2023 FORD F350 DRW 4X2
BODY: CUSTOM KNAPHEIDE PGNC-96 PLATFORM BODY

REVISION HISTORY				
ZONE	REV	DESCRIPTION	DATE	APPROVED
	A	INITIAL RELEASE	6/9/2022	

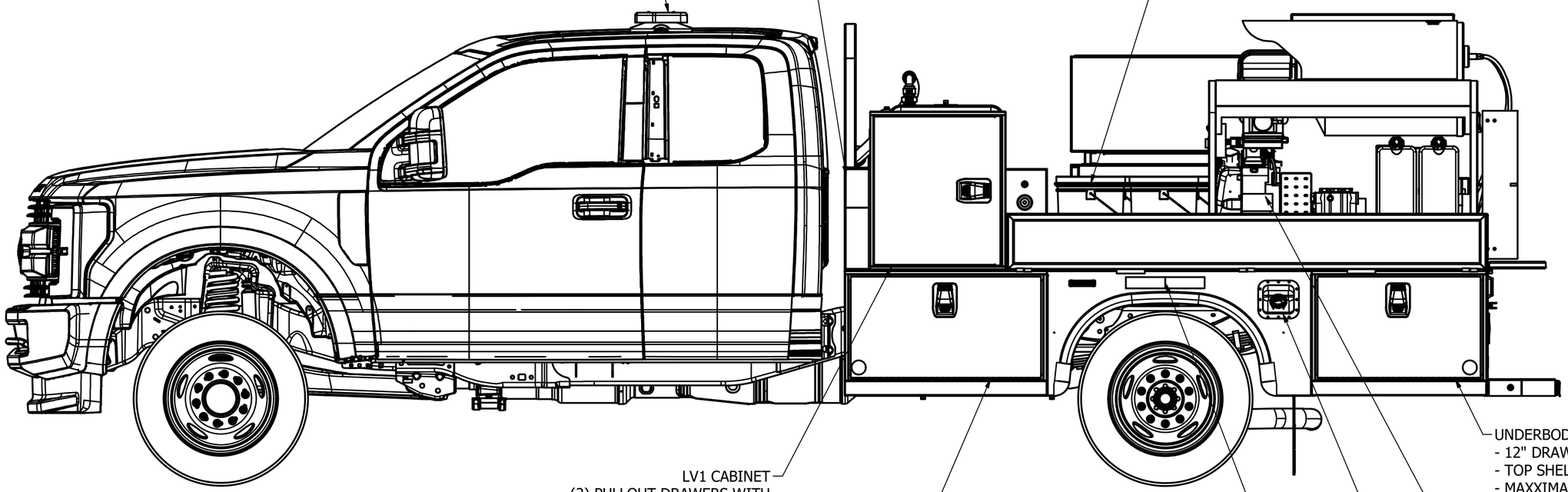

INCLUDED ITEMS NOT SHOWN:

- SEVERE DUTY SPRING WORK
- RUBBER FLOOR MATS IN CHASSIS
- BACKUP ALARM
- PTO
- FEDERAL SIGNAL CORNER STROBE LIGHTS (1) IN EACH HEADLAMP

CUSTOMER APPROVAL	DATE

BODY FINISH NOTES:

- PAINT URETHANE WHITE
- FULLY UNDERCOATED

Title: CITY OF NORTH LAS VEGAS - GRAFFITI TRUCK			
Drawing No: MH10301701	Rev: A	Calculated Weight: N/A	
Author:	Date: 6/8/2022		
Sheet: 1 of 5	Do Not Scale	Size: C	

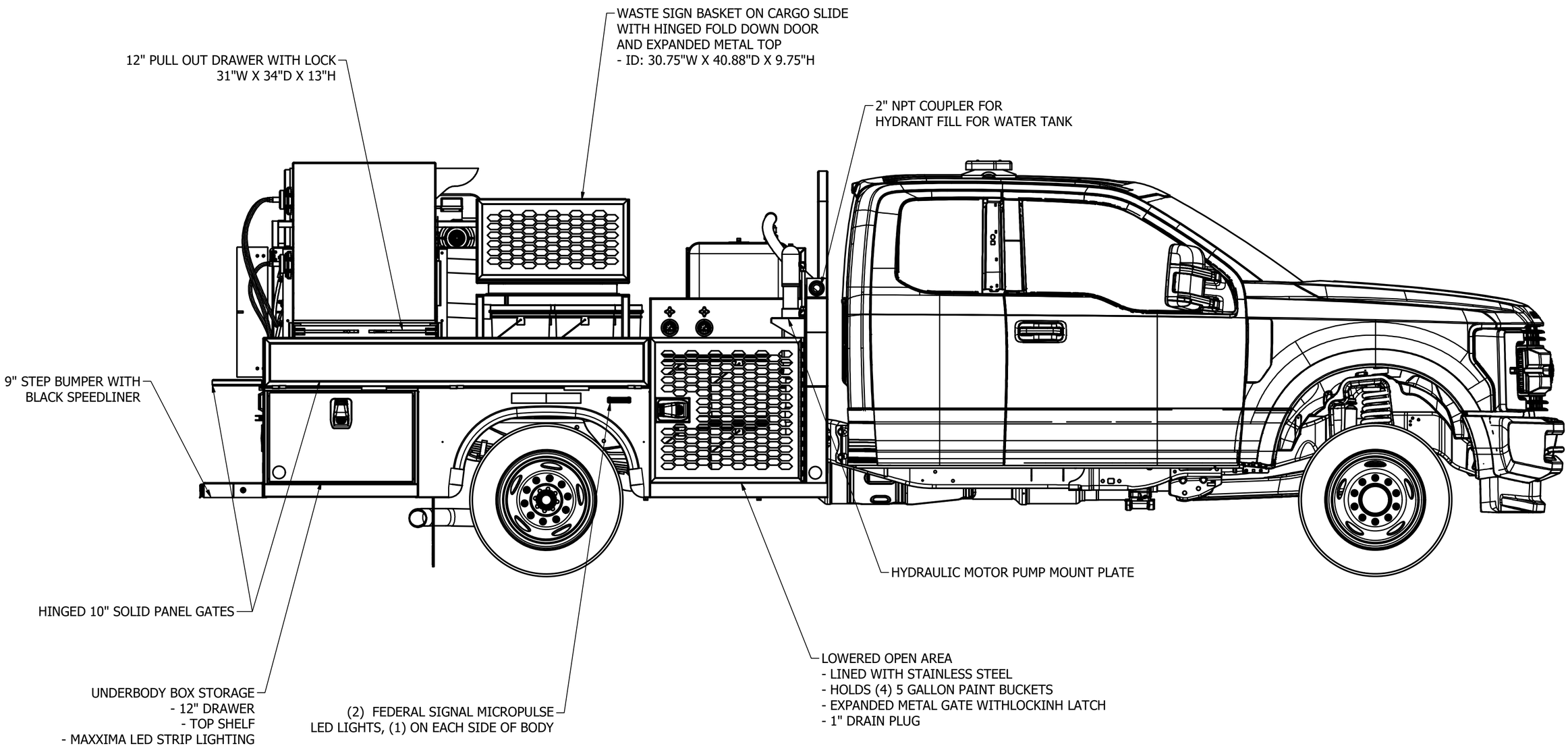

Title: CITY OF NORTH LAS VEGAS - GRAFFITI TRUCK			
Drawing No: MH10301701	Rev: A	Calculated Weight: N/A	
Author:		Date: 6/8/2022	
Sheet: 2 of 5	Do Not Scale	Size: C	

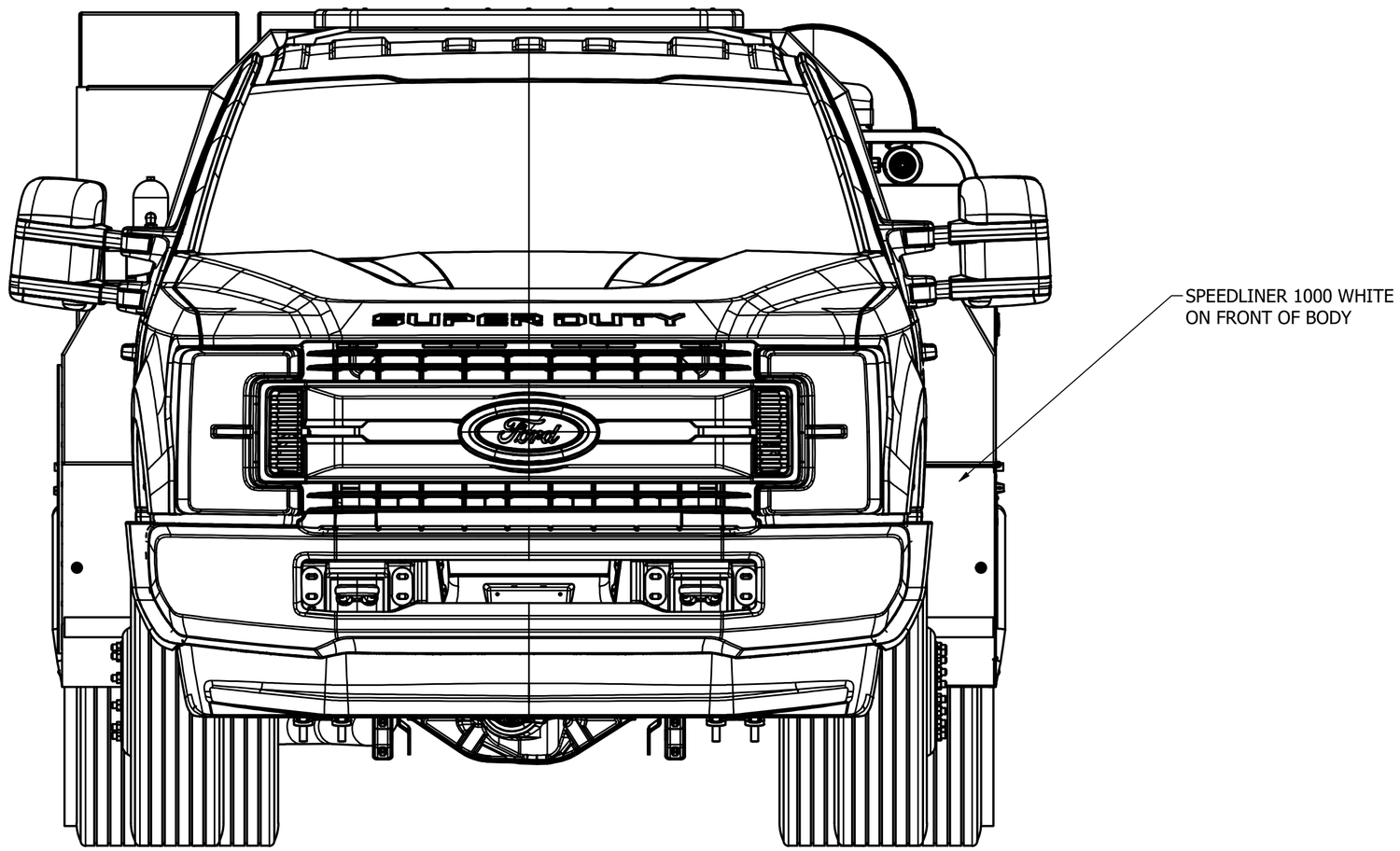

Title: CITY OF NORTH LAS VEGAS - GRAFFITI TRUCK			
Drawing No: MH10301701	Rev: A	Calculated Weight: N/A	
Author:	Date: 6/8/2022		
Sheet: 3 of 5	Do Not Scale	Size: C	

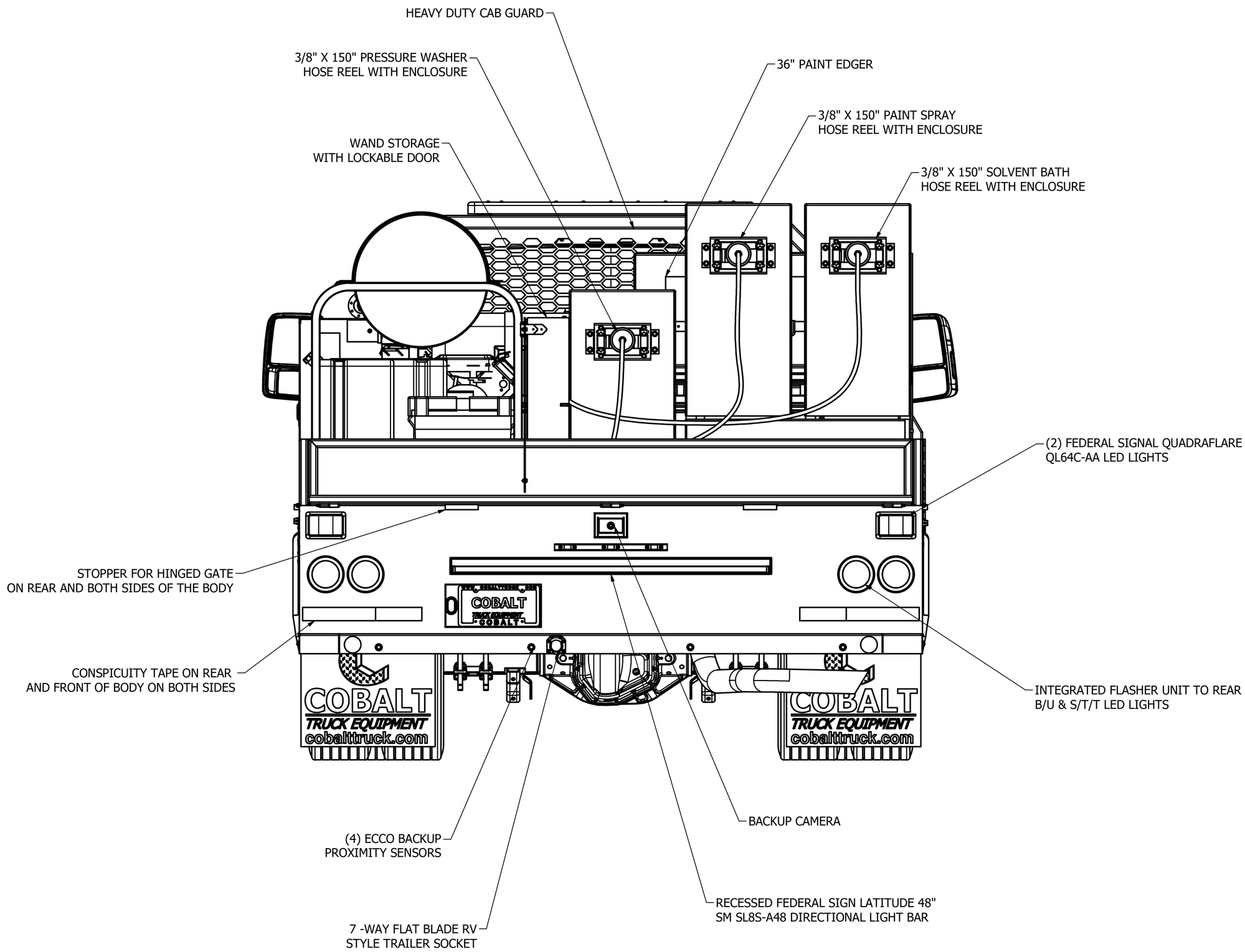

Title: CITY OF NORTH LAS VEGAS - GRAFFITI TRUCK			
Drawing No: MH10301701	Rev: A	Calculated Weight: N/A	
Author:	Date: 6/8/2022		
Sheet: 4 of 5	Do Not Scale	Size: C	

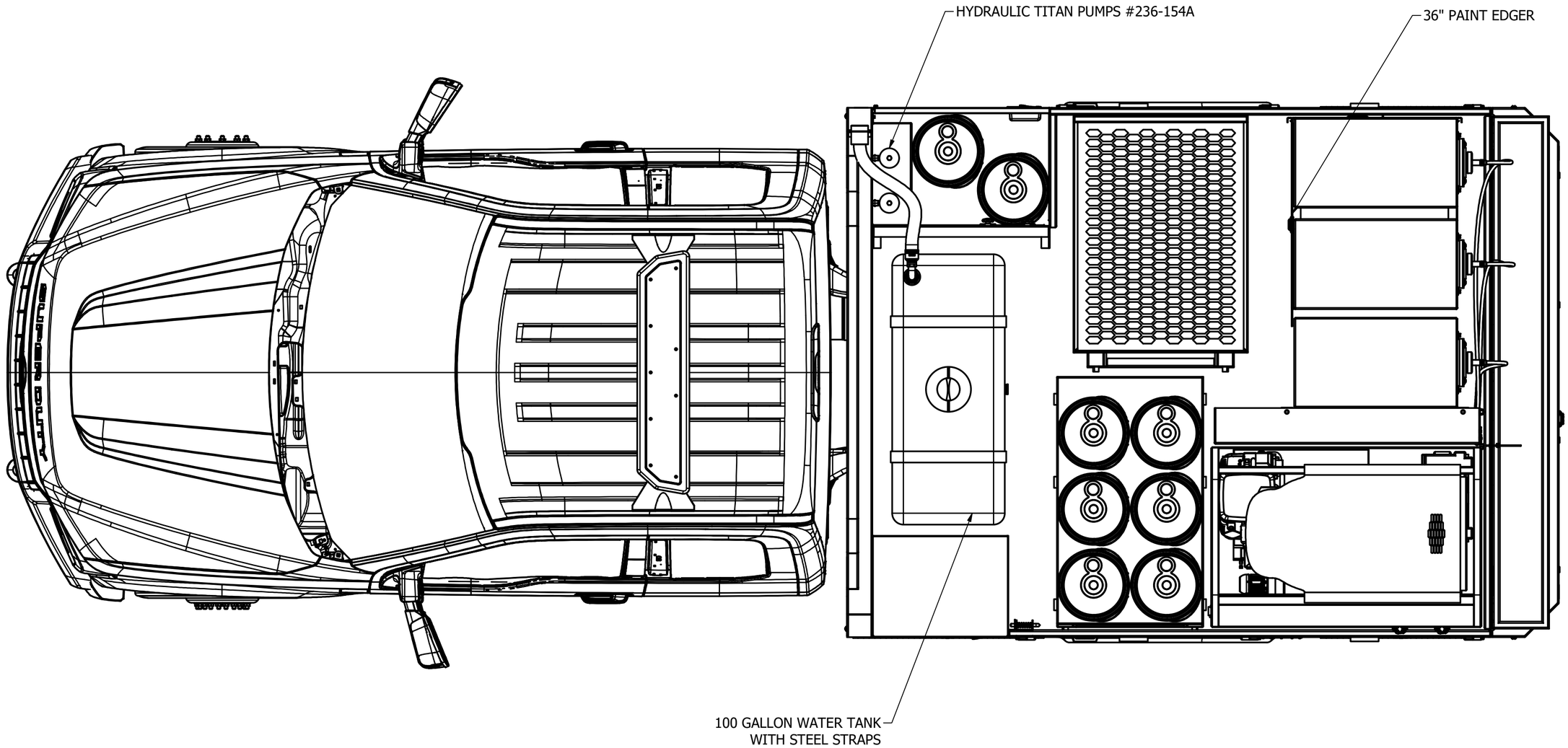

NOTE: HYDRAPAK & FLOOD LIGHTS HIDDEN FOR CLARITY

Title: CITY OF NORTH LAS VEGAS - GRAFFITI TRUCK			
Drawing No: MH10301701	Rev: A	Calculated Weight: N/A	
Author:		Date: 6/8/2022	
Sheet: 5 of 5	Do Not Scale	Size: C	

KNAPHEIDE
SINCE 1848

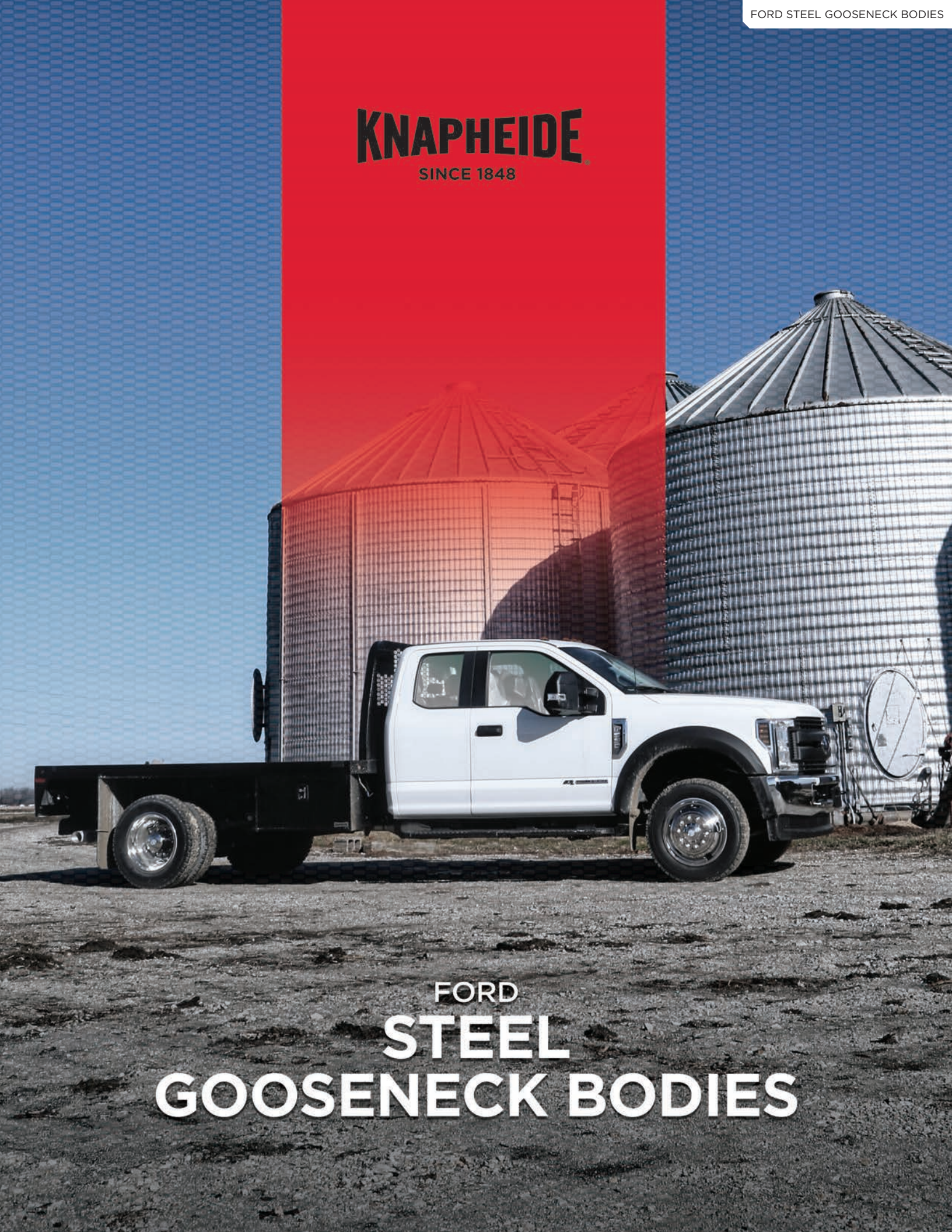

FORD STEEL GOOSENECK BODIES

KNAPHEIDE
STEEL GOOSENECK BODIES

GOOSENECK HITCH

Under-the-floor gooseneck hitch system with 2-5/16" ball installed. Hitch is rated at 30,000 lb. gross trailer weight with 5,000 lb. tongue weight.

STEEL GOOSENECK BODIES

Versatility with storage solutions to meet every need, Knapheide Gooseneck Bodies are an easy choice. Rugged construction, enhanced styling and secure storage give you a body that can haul it all.

Reliable offerings range from the economical PGNA, mid-level PGNB, skirted PGNC and the deluxe PGND.

POPULAR VOCATIONS

CONSTRUCTION

AGRICULTURE

LANDSCAPING/ TREE CARE

OIL/MINING/GAS

PRODUCT FEATURES

PGNA
GOOSENECK BODIES

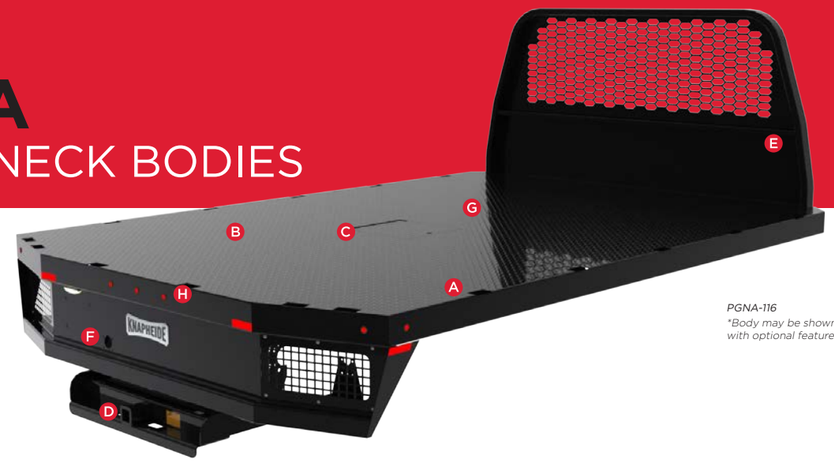

PGNA-116
**Body may be shown with optional features*

A. INTERNAL STAKE POCKETS
lining both sides and rear of the platform

B. RUGGED 1/8" THICK TREAD PLATE FLOOR
with 6" structural channel long sills (4" on 8' models)

C. HINGED ACCESS DOOR
to cover gooseneck hitch when not in use

D. INTEGRATED CLASS V RECEIVER HITCH
rated at 18,000 lb.(optional on 8' bodies as most 56" CA chassis include a factory hitch)

E. FORMED, INTEGRATED BULKHEAD
with stylized screened window and tapered design for improved visibility

F. SAFETY CHAIN ATTACHMENT POINTS AND 7-WAY TRAILER PLUG
included in gooseneck box and at receiver hitch

G. DURABLE OVEN-CURED COAT
finish painted black

H. ALL LED CLEARANCE AND MARKER LIGHTS
for visibility and added safety

FEATURES NOT SHOWN

12-GAUGE FORMED CROSS SILLS
spaced on 16" centers

ALUMINUM TREAD PLATE TRIM PIECE
on rear hitch plate provides a "no worry" step location

INTEGRATED DRIVER SIDE FUEL FILL CUP

ELECTRODEPOSITION PRIME-PAINT SYSTEM
provides superior corrosion resistance

PGNB
GOOSENECK BODIES

PGNB-116
**Body may be shown with optional features*

A. RUB RAILS
installed on both sides of bodies for strap, side and stake pocket protection

B. RUGGED 1/8" THICK TREAD PLATE FLOOR
with 6" structural channel long sills (4" on 8' models)

C. HINGED ACCESS DOOR
to cover gooseneck hitch when not in use

D. INTEGRATED CLASS V RECEIVER HITCH
rated at 18,000 lb.(optional on 8' bodies as most 56" CA chassis include a factory hitch)

E. FORMED, INTEGRATED BULKHEAD
with stylized screened window and tapered design for improved visibility

F. SAFETY CHAIN ATTACHMENT POINTS AND 7-WAY TRAILER PLUG
included in gooseneck box and at receiver hitch

G. DURABLE OVEN-CURED COAT
finish painted black

H. ALL LED CLEARANCE AND MARKER LIGHTS
for visibility and added safety

I. INTEGRATED OVAL LED B/U AND S/T/T LIGHTS
included in bulkhead and rear skirt

FEATURES NOT SHOWN

12-GAUGE FORMED CROSS SILLS
spaced on 16" centers

ALUMINUM TREAD PLATE TRIM PIECE
on rear hitch plate provides a "no worry" step location

INTEGRATED DRIVER SIDE FUEL FILL CUP

ELECTRODEPOSITION PRIME-PAINT SYSTEM
provides superior corrosion resistance

PRODUCT FEATURES

PGNC
GOOSENECK BODIES

PGNC-116
**Body may be shown with optional features*

A. SKIRTED GOOSENECK STYLING
with integrated front and rear toolboxes

B. RUB RAILS
installed on both sides of bodies for strap, side and stake pocket protection

C. RUGGED 1/8" THICK TREAD PLATE FLOOR
with 6" structural channel long sills (4" on 8' models)

D. HINGED ACCESS DOOR
to cover gooseneck hitch when not in use

E. INTEGRATED CLASS V RECEIVER HITCH
rated at 18,000 lb.(optional on 8' bodies as most 56" CA chassis include a factory hitch)

F. FORMED, INTEGRATED BULKHEAD
with stylized screened window and tapered design for improved visibility

G. SAFETY CHAIN ATTACHMENT POINTS AND 7-WAY TRAILER PLUG
included in gooseneck box and at receiver hitch

H. DURABLE OVEN-CURED COAT
finish painted black

I. ALL LED CLEARANCE AND MARKER LIGHTS
for visibility and added safety

J. INTEGRATED OVAL LED B/U AND S/T/T LIGHTS
included in bulkhead and rear skirt

K. CONTINUOUS STAINLESS STEEL HINGES
are pry-proof and corrosion-resistant

L. DOUBLE PANELED DOORS
consist of 20-gauge, two sided A-40 galvanneal steel

M. AUTOMOTIVE QUALITY, ROTARY-STYLE LATCHES
make opening and closing easy

FEATURES NOT SHOWN

12-GAUGE FORMED CROSS SILLS
spaced on 16" centers

ALUMINUM TREAD PLATE TRIM PIECE
on rear hitch plate provides a "no worry" step location

INTEGRATED DRIVER SIDE FUEL FILL CUP

ELECTRODEPOSITION PRIME-PAINT SYSTEM
provides superior corrosion resistance

INTERIOR COVER
protects internal latch from damage

ADJUSTABLE SECURITY RING STRIKERS
provide a weather-tight seal

NEOPRENE DOOR SEALS
protect compartments from the weather

DOUBLE-SPRING OVER-CENTER DOOR RETAINER
eliminates involuntary door swing

PGND
GOOSENECK BODIES

PGND-116
**Body may be shown with optional features*

A. DOUBLE PANELED DOORS
consist of 20-gauge, two sided A-40 galvanneal steel

B. THREE-QUARTER LENGTH FLIP TOP COMPARTMENTS
employ nitrogen gas struts for smooth opening and closing

C. RUGGED 1/8" THICK TREAD PLATE FLOOR
with 6" structural channel long sills (4" on 8' models)

D. FRONT COMPARTMENTS
36" high

E. INTEGRATED CLASS V RECEIVER HITCH
rated at 18,000 lb.(optional on 8' bodies as most 56" CA chassis include a factory hitch)

F. FORMED, INTEGRATED BULKHEAD
with stylized screened window and tapered design for improved visibility

G. SAFETY CHAIN ATTACHMENT POINTS AND 7-WAY TRAILER PLUG
included in gooseneck box and at receiver hitch

H. DURABLE OVEN-CURED COAT
finish painted black

I. ALL LED CLEARANCE AND MARKER LIGHTS
for visibility and added safety

J. INTEGRATED OVAL LED B/U AND S/T/T LIGHTS
included in bulkhead and rear skirt

K. CONTINUOUS STAINLESS STEEL HINGES
are pry-proof and corrosion-resistant

L. AUTOMOTIVE QUALITY, ROTARY-STYLE LATCHES
make opening and closing easy

M. 8" TALL SLAM TAILGATE
with center-mounted release handle

FEATURES NOT SHOWN

12-GAUGE FORMED CROSS SILLS
3" formed

ALUMINUM TREAD PLATE TRIM PIECE
on rear hitch plate provides a "no worry" step location

250-LB. CAPACITY SHELVES MADE OF SPANGLED STEEL
(2 in each front vertical compartment, 1 in each rear compartment for bodies over 9')

ELECTRODEPOSITION PRIME-PAINT SYSTEM
provides superior corrosion resistance

INTERIOR COVER
protects internal latch from damage

ADJUSTABLE SECURITY RING STRIKERS
provide a weather-tight seal

NEOPRENE DOOR SEALS
protect compartments from the weather

DOUBLE-SPRING OVER-CENTER DOOR RETAINER
eliminates involuntary door swing

HINGED ACCESS DOOR
to cover gooseneck hitch when not in use

POPULAR OPTIONS

PGNA / PGNB / PGNC

ROUGHNECK CONTRACTOR PACKAGE

4" REMOVABLE SIDE BOARDS

ABOVE BODY AND UNDERBODY TOOLBOXES

GOOSENECK HITCH AND TRAP DOOR REMOVAL

Applies to PGNa and PGNB models

INTEGRATED OVAL B/U AND S/T/T LIGHTS IN REAR SKIRT

Applies to PGNA model only

3/16" TREAD PLATE FLOOR

Applies to PGNB and PGNC models

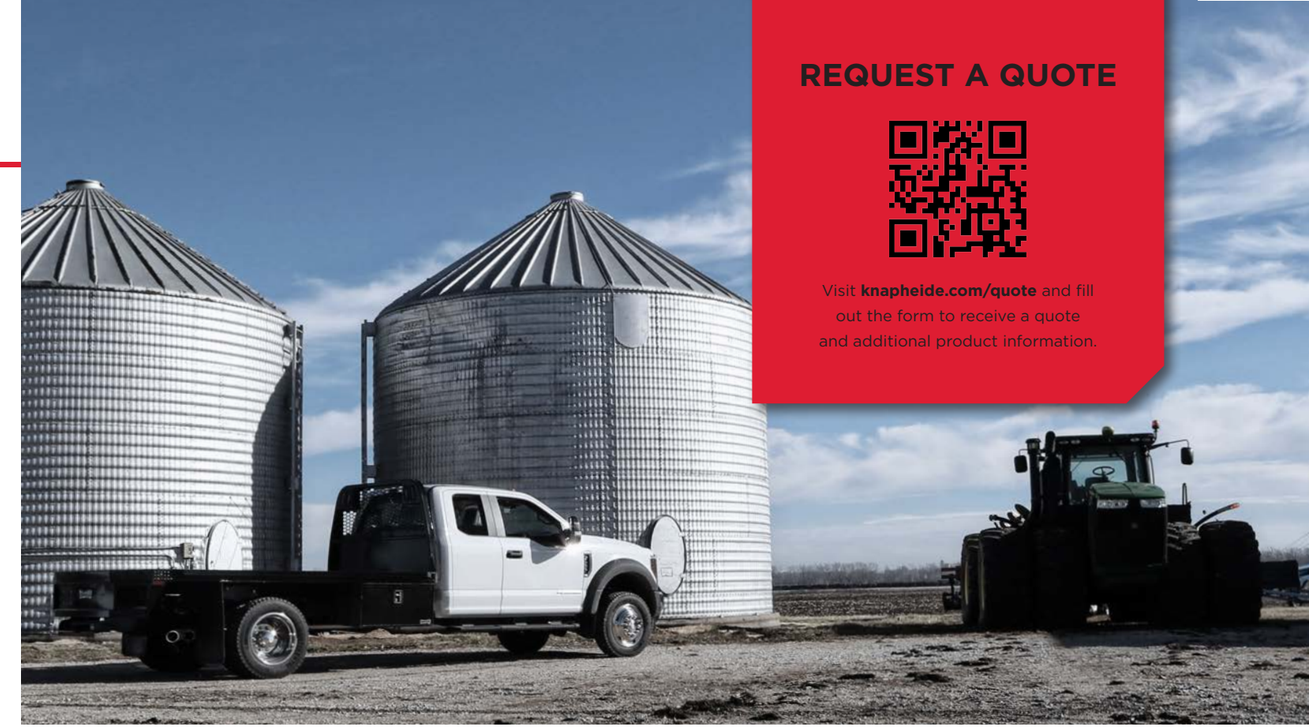

REQUEST A QUOTE

Visit **knapheide.com/quote** and fill out the form to receive a quote and additional product information.

REQUEST A QUOTE

Visit **knapheide.com/quote** and fill out the form to receive a quote and additional product information.

POPULAR OPTIONS

PGND

3/16" TREAD PLATE FLOOR

ADDITIONAL ALUMINUM TREAD PLATE OVERLAY

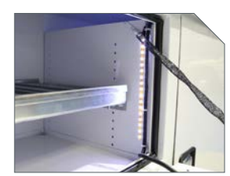

LED COMPARTMENT LIGHTS

CARGO D-RINGS

C-TECH DRAWER SETS

POWER LOCKS

PGNA

MODEL	LENGTH	WIDTH	WEIGHT	APPLICATION	SWING RADIUS	LONG SILL SPACING
PGNA-738-F	7’3”	80”	770 lb.	40” CA SRW	60”	38”
PGNA-868-F	8’6”	80”	850 lb.	56” CA SRW	60”	38”
PGNA-968	9’6”	80”	980 lb.	60” CA SRW	67”	34”
PGNA-86-F	8’6”	96”	955 lb.	56” CA DRW	64.25”	38”
PGNA-96	9’6”	96”	1,105 lb.	60” CA DRW	72”	34”
PGNA-116	11’6”	96”	1,283 lb.	84” CA DRW	72”	34”
PGNA-116-MD	11’6”	96”	1,289 lb.	84” CA DRW	72”	34”

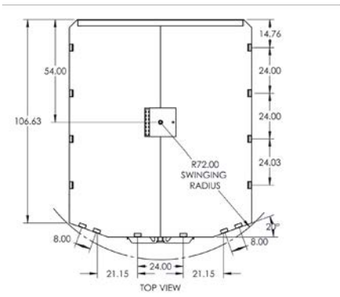

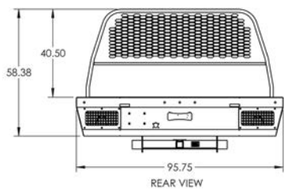

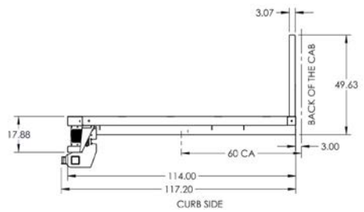

PGNC

MODEL	LENGTH	WIDTH	WEIGHT	APPLICATION	SWING RADIUS	LONG SILL SPACING
PGNC-738-F	7’3”	84”	887 lb.	40” CA SRW	60”	38”
PGNC-868-F	8’6”	84”	1,054 lb.	56” CA SRW	60”	38”
PGNC-968	9’6”	84”	1,162 lb.	60” CA SRW	67”	34”
PGNC-86-F	8’6”	96”	1,166 lb.	56” CA DRW	63”	38”
PGNC-96	9’6”	96”	1,270 lb.	60” CA DRW	70”	34”
PGNC-116	11’6”	96”	1,508 lb.	84” CA DRW	70”	34”
PGNC-116-MD	11’6”	96”	1,623 lb.	84” CA DRW	70”	34”

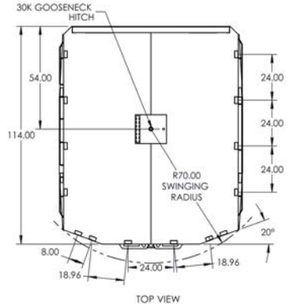

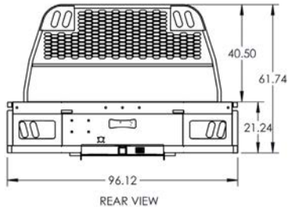

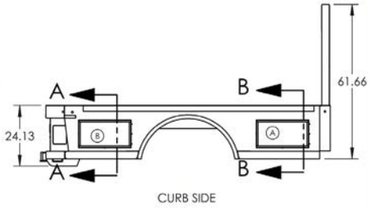

PGNB

MODEL	LENGTH	WIDTH	WEIGHT	APPLICATION	SWING RADIUS	LONG SILL SPACING
PGNB-738-F	7’3”	84”	815 lb.	40” CA SRW	60”	38”
PGNB-868-F	8’6”	84”	879 lb.	56” CA SRW	60”	38”
PGNB-968	9’6”	84”	1,053 lb.	60” CA SRW	67”	34”
PGNB-86-F	8’6”	96”	957 lb.	56” CA DRW	63”	38”
PGNB-96	9’6”	96”	1,130 lb.	60” CA DRW	70”	34”
PGNB-116	11’6”	96”	1,290 lb.	84” CA DRW	70”	34”
PGNC-116-MD	11’6”	96”	1,315 lb.	84” CA DRW	70”	34”

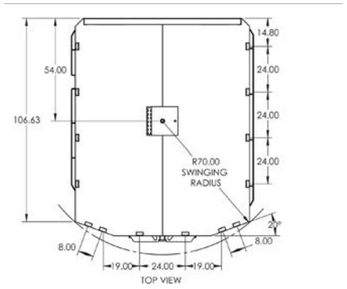

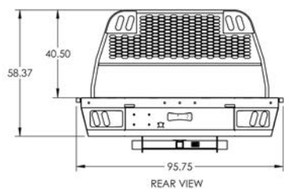

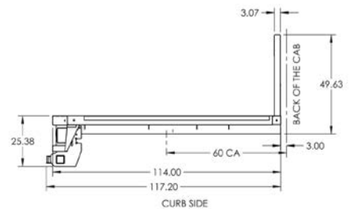

PGND

MODEL	LENGTH	WIDTH	WEIGHT	APPLICATION	SWING RADIUS	LONG SILL SPACING
PGND-738-F	7’3”	80”	1,143 lb.	40” CA SRW	61”	38”
PGND-868-F	8’6”	80”	1,391 lb.	56” CA SRW	61”	38”
PGND-968	9’6”	80”	1,568 lb.	60” CA SRW	68”	34”
PGND-86-F	8’6”	96”	1,582 lb.	56” CA DRW	64.5”	38”
PGND-96	9’6”	96”	1,656 lb.	60” CA DRW	71.5”	34”
PGND-116	11’6”	96”	1,939 lb.	84” CA DRW	71.5”	34”
PGND-116-MD	11’6”	96”	1,9511 lb.	84” CA DRW	71.5”	34”

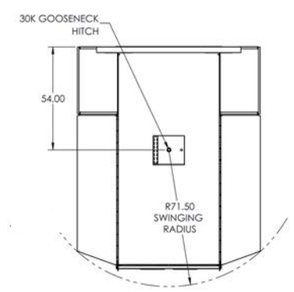

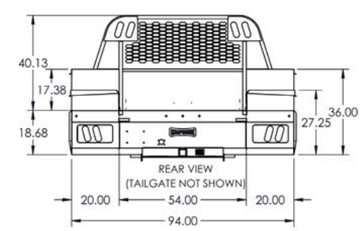

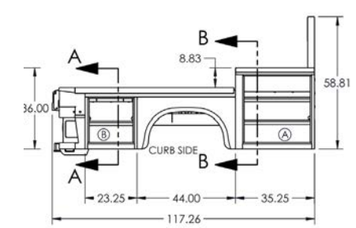

COMMITMENT TO

CORROSION RESISTANCE

Corrosion won't be a concern when you buy quality Knapheide products. To give you the best corrosion protection, we utilize a state-of-the-art, custom-designed, 12-step, SST cathodic electrodeposition finishing system, called "E-Coat."

It bonds prime paint to steel by an electroplating process to give you a superior coat of primer, resulting in better corrosion protection compared to spraying methods.

This system allows us to create products with the highest level of corrosion resistance available.

FOLLOW US
LIKE US
TAG US

THREE YEAR, LIMITED TIME WARRANTY

NO RUST THROUGH

FREE FROM DEFECTS IN WORKMANSHIP

FREE FROM DEFECTS IN MATERIALS

TO LEARN MORE VISIT
www.knapheide.com/warranty

KNAPHEIDE®
SINCE 1848

NEVER SETTLE

If you are going to be a leader, it takes more than building a high-quality product. It means never being totally satisfied with that product, no matter how high quality it may be. It requires constant vigilance and a willingness to take a chance on something new. And it means exceeding expectations every time. As the industry changes, one thing never will—our commitment to making customers like you as productive and efficient as possible. We know you don't settle, and we don't either. That's why we want you never to settle for anything less than Knapheide on the back of your truck.

KNAPHEIDE. NEVER SETTLE.

BUILT IN QUINCY ★ ILLINOIS

The Knapheide Manufacturing Company
1848 Westphalia Strasse | Quincy, IL 62305
217-222-7131
www.knapheide.com

SL70F 2M 0720 D
Specifications subject to change without notice.

© The Knapheide Manufacturing Company 2020

COBALT TRUCK EQUIPMENT LLC LIMITED WARRANTY POLICY

Warranty Coverage:

Products manufactured by Cobalt Truck Equipment LLC (CTE) are warranted to be free from defects in material and workmanship, under proper use, application and maintenance in accordance with CTE's written recommendations, instructions and specifications as follows:

- **Labor on CTE workmanship Six (6) months:** from the date the unit is put into service, as indicated on the sales invoice.

- **IMT One (1) year: Dom I/II/III/IV, DSC, Sitestar, Compressor, and Crane: Original parts,** from the date the unit or part is put into service as indicated on the sales invoice. As per the manufacturer warranty. **Excluding refurbished parts** which have a 90 day warranty. Consumables are not covered i.e. wear pads, seals, oils, filters ETC... (Refer to Iowa Mold Tooling for detailed warranty policy)

- **PTO / Pumps One (1) year: To be free of defects in materials and workmanship at date of purchase:** Failures due to **Fretting** which appears as a "rusting and wearing" from lack of grease, pressure spikes, contamination, operator error and failure to provide proper maintenance documentation to CTE are **not** covered. Manufacturer Warranty covers part only, additional parts and labor are the responsibility of the purchaser. (Refer to PTO/Pump Manufacturer for detailed warranty policy)

- **Original Vanair compressor One (1) year:** From the date the unit is put into service as indicated on the sales invoice. All compressor components including the shaft seal are warranted for **One (1) year.** The hydraulic motor is warranted for **Two (2) years**. Original Vanair rotary screw air end assembly only is covered for **Three (3) years.** (Refer to Vanair Manufacturing for detailed warranty policy)

- **Air N Arc 300 All-In-One Power System:** From the date the unit is put into service as indicated on the sales invoice. When following the prescribed maintenance schedule, the rotary screw compressor unit warranted for **Five (5) years,** and all the major components warranted for **Three (3) years.** (Note: engines are warranted separately by the engine manufacturer.) Batteries are warranted for **One (1) year.** Consumable products such as filters, oils etc. and electrodes are not covered. (Refer to Vanair Manufacturing for detailed warranty policy)

- **Miller Enpak**: From the date the unit is put into service as indicated on the sales invoice is warranted for **Three (3) years.** (Refer to Miller Electrical Manufacturing for detailed warranty policy)

- **Duro Reel: One (1) Year:** Only parts of the reel itself are covered. Does **not** include hoses and fairleads. Does **not** include labor. (Refer to Duro Manufacturing for detailed warranty policy)

- **Reelcraft Reel Two (2) year:** Only parts of the reel itself are covered. Does **not** include hoses. Does **not** include labor. (Refer to Reelcraft for detailed warranty policy)

- **Paint coverage Five (5) year:** on structural components such as crane bases, masts, booms, truck body doors and body panels to be free from defects such as corrosion, blisters, unreasonable color or gloss loss, or delamination determined to result from paint failure. This warranty is effective from the date the unit is put into service as indicated on the sales invoice. Damage such as chips, scratches, and corrosion due to dirt build-up or paint pealing off from use of pressure washers and normal wear that occurs through usage of the product is not covered under this warranty. Rust bleed out from inaccessible structural features as a result of prolonged moisture exposure does not constitute a failure in paint coverage or adhesion and is not covered under this warranty.

- **Parts NOT of CTE manufacture are warranted only to the extent they are warranted by the original manufacturer. CTE's obligation** under this warranty is limited to, and the sole remedy for any such defect shall be the repair or replacement (at CTE's option) of unaltered parts returned to CTE, freight prepaid, and proven to have such defect, provided such defect occurs within the above stated warranty period, is reported to CTE within fourteen (14) days of its occurrence, and all claims and failing parts are returned to CTE within thirty (30) days after the repair is completed. CTE pays ground freight **one-way only**. **Premium freight will be at the customer's expense.**

COBALT TRUCK EQUIPMENT LLC LIMITED WARRANTY POLICY

- **IMPLIED WARRANTY EXCLUDED** – Only authorized CTE warranties are valid and applicable to CTE product. These warranties are in lieu of all other express or implied warranties or representations, including warranties of merchantability, or fitness for any particular purpose, or of any other obligations on the part of CTE. CTE may, in specific instances and by **written approval of an officer of the firm, in advance** of any bid or sales, modify or extend the terms of the Standard CTE warranty.

- **WARRANTY REGISTRATION, SERVICE AND CLAIMS** – Warranty claims must be submitted and shall be processed in accordance with CTE's established warranty claim procedures. Warranty service must be performed by CTE or an agent **authorized**, **in advance**, by CTE. At the time of requesting warranty service, the **purchaser** must present evidence of the date of the delivery of the product. The **purchaser** shall pay any premium for overtime labor requested by **purchaser**; any charge for making service calls and for transporting the equipment to the place where warranty work is performed, unless otherwise authorized in writing by CTE. **NOTE:** Our warranty requires that all defective parts be returned to CTE freight prepaid.

- **PARTS AND LABOR RATE** – Labor reimbursement for warranty claims will be paid at the standard hourly rate of $75.00, as reported to CTE, multiplied by the number of work hours listed on the warranty service report. CTE reserves the right to modify the claims for warranty work hours which appear excessive. Part reimbursement for warranty claims will be one hundred percent (100%) of the selling price paid by the authorized repair facility. Labor is **not** included on service parts.

- **WARRANTY VOIDED –** All obligations of CTE under this warranty shall be terminated: (1) if service other than normal maintenance, or normal replacement of service items is performed, by someone other than an authorized CTE representative, (2) if product is modified or altered in ways not approved by CTE, (3) if warranty work is performed before or without written consent from CTE, (4) upon delivery of product to purchaser, the CTE warranty policy is not acknowledged with a signature in the presence of a CTE representative.

- **PURCHASER'S RESPONSIBILITY** – This warranty covers only defective material and workmanship. It does **not** cover depreciation or damage caused by normal wear, accident, improper protection in storage, improper use or neglect. The purchaser has the obligation of performing the care and documentation of maintenance duties discussed in manufacturer written recommendation, instruction and specification. Any damage, which results because of purchaser's failure to perform such duties, shall not be covered by this warranty. The cost of normal maintenance and normal replacement of consumable service items such as wear pads, oil, etc. shall be paid by the purchaser.

- **CONSEQUENTIAL DAMAGES** – The only remedies the purchaser has in connection with the breach of performance of any warranty on CTE products are those set forth herein. In **no** event will CTE be liable for business interruptions, loss of sales and/or profits, rental costs or substitute equipment fees, costs of delay for any other special, indirect, incidental or consequential loss, costs or damages.

- **REPRESENTATIONS EXCLUDED –** CTE products are subject to no expressed, implied or statutory warranty other than herein set forth. No agent or representative has any authority to alter the terms of this warranty in any way whatsoever or to make any representations or promises, express or implied, as to the quality or performance of CTE products other than those set forth in CTE Warranty Policy.

- **CHANGE IN DESIGN** – CTE reserves the right to make changes in design or improvements at any time. CTE retains the right and abstains from any obligation to install aforementioned changes to any of CTE products that are already in service and/or have been accepted by purchaser. **NOTE:** Changes to this section of CTE warranty policy dated March 1st 2016 include **all** CTE products with an earlier in service date of the current CTE warranty policy, and CTE will not be held liable or implies any design changes will be made, offered, installed or upgraded and furthermore release any liability to incur any costs and/or fees associated.

CTE WARRANTY PROVISIONS

- The CTE warranty applies **only** to **new and unused** products which, after shipment from CTE, have not been altered, changed, repaired or mistreated in any manner whatsoever. Normal maintenance items such as lubricants and filters are not warrantable items.
- Damage resulting from abuse, neglect, misapplication of equipment, added parts not previously installed by CTE not included in the original sales invoice, are not covered under the CTE warranty.
- Deterioration or wear occasioned by chemical and/or abrasive action or excessive heat shall not constitute defects.
- CTE will handle parts replacement and/or correction of defective workmanship.
- Failure to file a detailed warranty claim/service report for each occurrence of material defect or defective workmanship will cause warranty claim to be rejected.
- Defective material must be returned within **30 days** of receipt of shipping instructions. Failure to do so within specified time will result in forfeiture of claim.
- CTE is responsible for the initial investigation and write up of any warranty claim.
- Customer shall be allowed no more than **30 days** from date of repair to file a warranty claim/service report.
- The CTE warranty does not cover diagnostic calls, field service travel to include mileage, per diem, fuel, and lodging expenses incurred to repair products covered under the CTE Warranty Policy. The purchaser is responsible for **all** associated costs and fees incurred, when a CTE Field Service Technician, or any other CTE personnel, is requested by the purchaser.
- CTE will deduct from allowable credits, or invoice for excessive freight charges caused by sender failing to follow return shipping instructions, and parts not returned under a warranty claim.
- CTE pays ground freight one-way only. Premium charges such as Next Day Air will be the responsibility of the purchaser.
- CTE end-users who automatically deduct the value of a warranty claim from an outstanding balance due and payable to CTE, prior to receiving a written notification and approval from CTE, will be subject to forfeiture of any and/or all of associated costs and fees with the purchasers warranty claim.

COBALT TRUCK EQUIPMENT LLC LIMITED WARRANTY POLICY

I have **read and understand** the Cobalt Warranty Policy and agree to all conditions that are contained in this document. _____Int.

Customer Signature _____Date _____

Print Customer Name and Title _____

CTE signature _____Date _____

Print CTE Name and Title _____

Job Number _____Unit Number _____

*legal disclaimer: If purchaser does **not** acknowledge warranty policy terms and conditions, **with signature**, **in the presence of and witnessed by CTE representative**, all contents herein are void. CTE will not honor any written or implied warranty and all costs associated with repairs, damages or any other claims are the sole responsibility of the purchaser. CTE will not under any circumstance be held liable for future costs / fees.